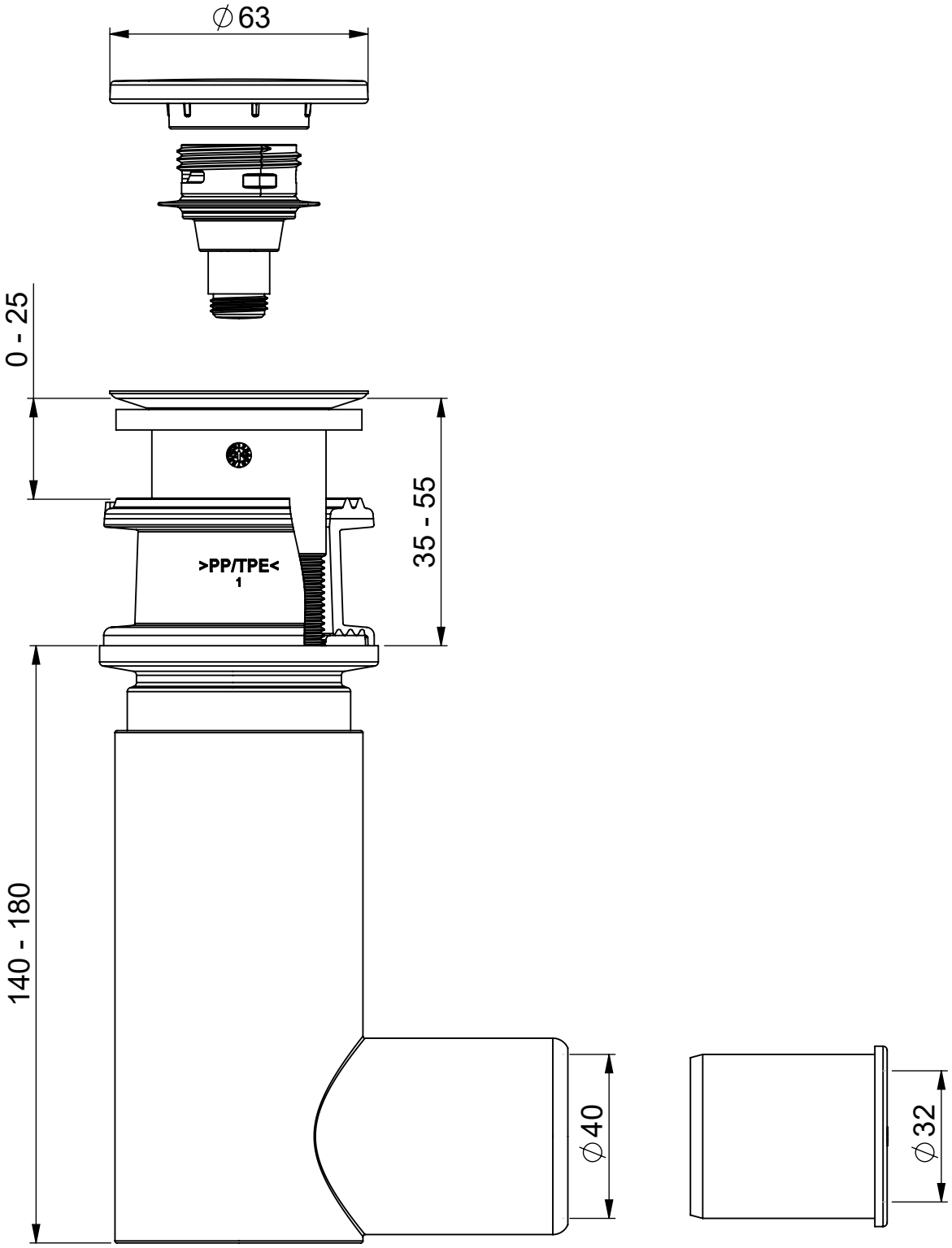

Product	EASYCLEAN 40 POPUP
Type	
No	EC4-C4NNAm
Date	11.9.2025 OE

[X] New type [ ] New version Old version

PREVEX