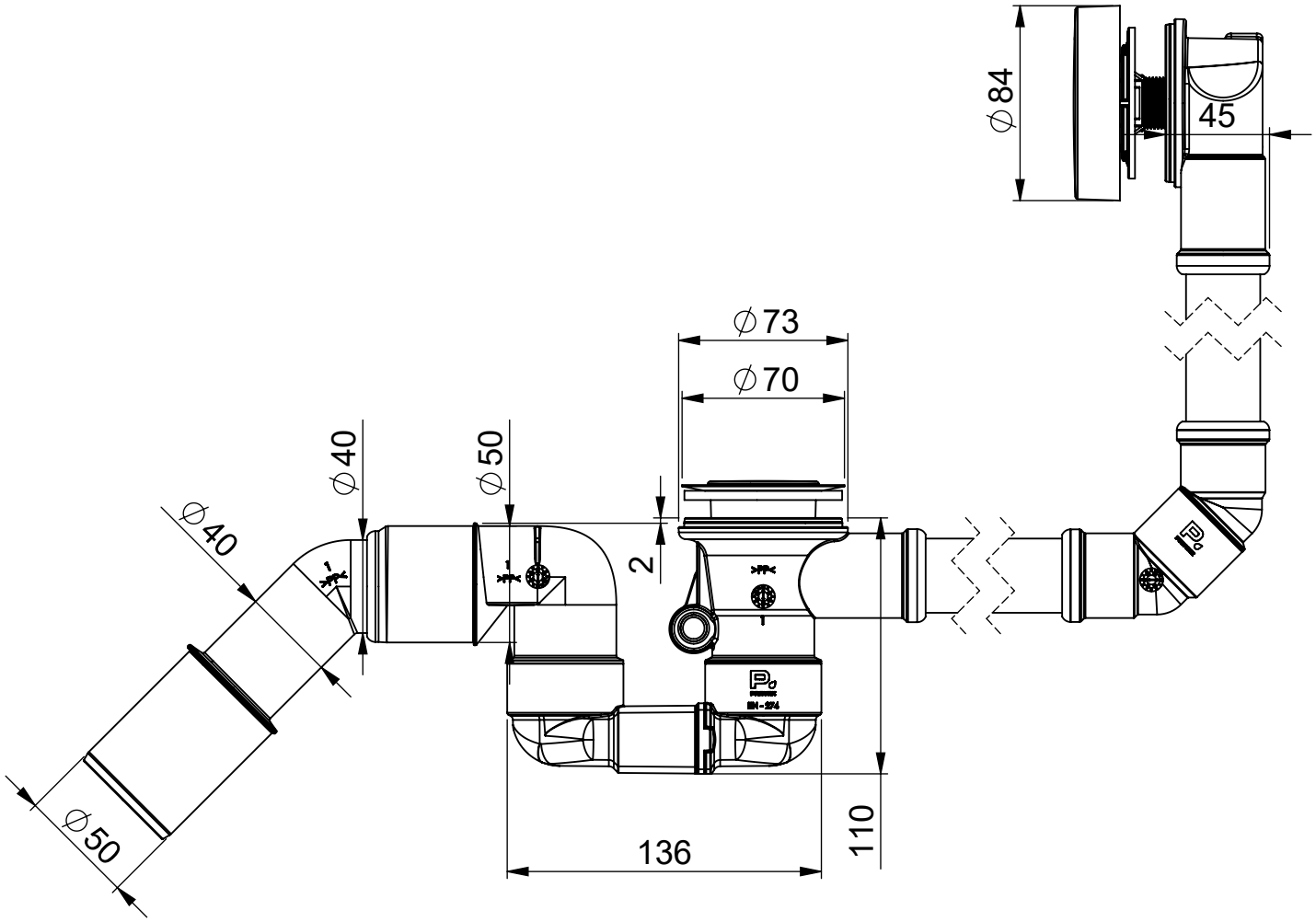

Product	Bathloc
Type	
No	Bathloc Remote, with rigid overflow pipe
Date	01.07.2022 LW

[X] New type [ ] New version Old version

PREVEX

FIN-66900 Uusikaarlepyy/Nykarleby